ATSC Standard:
A/342 Part 1, Audio Common Elements

Doc. A/342-1:2022-03
31 March 2022

Advanced Television Systems Committee
1300 I Street, N.W., Suite 400E
Washington, DC 20005
202-872-9160

The Advanced Television Systems Committee, Inc. is an international, non-profit organization developing voluntary standards and recommended practices for broadcast television and multimedia data distribution. ATSC member organizations represent the broadcast, professional equipment, motion picture, consumer electronics, computer, cable, satellite, and semiconductor industries. ATSC also develops implementation strategies and supports educational activities on ATSC standards. ATSC was formed in 1983 by the member organizations of the Joint Committee on Inter-society Coordination (JCIC): the Consumer Technology Association (CTA), the Institute of Electrical and Electronics Engineers (IEEE), the National Association of Broadcasters (NAB), the Internet & Television Association (NCTA), and the Society of Motion Picture and Television Engineers (SMPTE). For more information visit www.atsc.org.

Note: The user's attention is called to the possibility that compliance with this standard may require use of an invention covered by patent rights. By publication of this standard, no position is taken with respect to the validity of this claim or of any patent rights in connection therewith. One or more patent holders have, however, filed a statement regarding the terms on which such patent holder(s) may be willing to grant a license under these rights to individuals or entities desiring to obtain such a license. Details may be obtained from the ATSC Secretary and the patent holder.

Implementers with feedback, comments, or potential bug reports relating to this document may contact ATSC at https://www.atsc.org/feedback/.

Revision History

Version	Date
Candidate Standard approved	3 May 2016
A/342-1:2017 Standard approved	24 January 2017
Reference [2] updated to point to published version of A/342 Part 2:2017	24 February 2017
Reference [3] updated to point to published version of A/342 Part 3:2017	7 March 2017
Reference [4] updated to point to published version of A/331:2017	6 December 2017
A/342-1:2021 Standard approved	9 March 2021
A/342-1:2022-03 published (references to ATSC documents updated)	31 March 2022

Table of Contents

1. SCOPE 1
   1.1 Introduction and Background 1
   1.2 Organization 1
2. REFERENCES 1
   2.1 Normative References 1
   2.2 Informative References 2
3. DEFINITION OF TERMS 2
   3.1 Compliance Notation 2
   3.2 Acronyms and Abbreviations 2
4. AUDIO GLOSSARY 3
   4.1 Common Terms 3
   4.2 Mapping of Terms to Specific Technologies 5
5. SYSTEM OVERVIEW 6
   5.1 Audio System Features 6
      5.1.1 Immersive and Legacy Support 6
      5.1.2 Next Generation Audio System Flexibility 6
      5.1.3 Personalization and Interactive Control 6
      5.1.4 Next Generation Audio System Loudness Management and Dynamic Range Control 6
      5.1.5 Audio Emergency Information 7
   5.2 Audio System Architecture 7
   5.3 Central Concepts 7
      5.3.1 Audio Program Components and Presentations 7
      5.3.2 Audio Element Formats 8
      5.3.3 Audio Rendering 8
6. SPECIFICATION 9
   6.1 Audio Constraints 9
      6.1.1 Sampling Rate 9
      6.1.2 Audio Program Structure 9
      6.1.3 General Elementary Stream Structure 9
   6.2 Signaling of Audio Characteristics 10

ANNEX A: EXAMPLES OF COMMON BROADCAST OPERATING PROFILES 11
   A.1 Operating Profiles 11

Index of Figures and Tables

Figure 4.1 Relationship of key audio terms. 5
Figure 5.1 ATSC 3.0 generalized layer architecture. 7
Figure A.1.1 Encoding of example broadcast operating profiles. 13

Table 4.1 Common Terms as they Apply to this Standard 3
Table 4.2 Mapping of Alternative Terms to Audio Glossary Common Terms 5
Table 6.1 Audio Characteristics 10
Table A.1.1 Encoding of Example Broadcast Operating Profiles 12

ATSC Standard: A/342 Part 1, Audio Common Elements

1. SCOPE

This document specifies the common framework for ATSC 3.0 Audio. It is intended to be used in conjunction with the specific audio technologies described in subsequent parts of this Standard [2] [3].

1.1 Introduction and Background

The ATSC 3.0 audio system provides immersive and personalizable sound for television. It is not compatible with the audio system used in ATSC 1.0 service [6].

1.2 Organization

This document is organized as follows:

- Section 1 – Outlines the scope of this document and provides a general introduction.
- Section 2 – Lists references and applicable documents.
- Section 3 – Provides a definition of general terms, acronyms, and abbreviations for this document.
- Section 4 – Audio Glossary (defines specialized audio terminology used in this document and its references, with mapping of those items that are identically defined but named differently in those references).
- Section 5 – System overview.
- Section 6 – Specification of Common Elements for ATSC 3.0 Audio.

2. REFERENCES

All referenced documents are subject to revision. Users of this Standard are cautioned that newer editions might or might not be compatible.

2.1 Normative References

The following documents, in whole or in part, as referenced in this document, contain specific provisions that are to be followed strictly in order to implement a provision of this Standard.

[1] IEEE: "Use of the International Systems of Units (SI): The Modern Metric System," Doc. SI 10, Institute of Electrical and Electronics Engineers, New York, NY.

[2] ATSC: "ATSC Standard: A/342 Part 2, AC-4 System," Doc. A/342-2:2022-03, Advanced Television Systems Committee, Washington, DC, 31 March 2022.

[3] ATSC: "ATSC Standard, A/342 Part 3, MPEG-H Audio System," Doc. A/342-3:2022-03, Advanced Television Systems Committee, Washington, DC, 31 March 2022.

[4] ATSC: "ATSC Standard: Signaling, Delivery, Synchronization, and Error Protection," Doc. A/331:2022-03, Advanced Television Systems Committee, Washington, DC, 31 March 2022.

[5] IETF: BCP 47, "Tags for Identifying Languages," Internet Engineering Task Force, Reston, VA, September 2009.

2.2 Informative References

The following documents contain information that may be helpful in applying this Standard.

[6] ATSC: "Digital Audio Compression (AC-3) (E-AC-3) Standard," Doc. A/52:2015, Advanced Television Systems Committee, Washington, DC, 24 November 2015.

[7] DASH-IF: "Guidelines for Implementation: DASH-IF Interoperability Point for ATSC 3.0," DASH Industry Forum, Beaverton, OR.

3. DEFINITION OF TERMS

With respect to definition of terms, abbreviations, and units, the practice of the Institute of Electrical and Electronics Engineers (IEEE) as outlined in the Institute's published standards [1] shall be used. Where an abbreviation is not covered by IEEE practice or industry practice differs from IEEE practice, the abbreviation in question will be described in Section 3.2 of this document.

3.1 Compliance Notation

This section defines compliance terms for use by this document:

shall – This word indicates specific provisions that are to be followed strictly (no deviation is permitted).

shall not – This phrase indicates specific provisions that are absolutely prohibited.

should – This word indicates that a certain course of action is preferred but not necessarily required.

should not – This phrase means a certain possibility or course of action is undesirable but not prohibited.

3.2 Acronyms and Abbreviations

The following acronyms and abbreviations are used within this document.

AC-3 – Audio Codec 3
AC-4 – Audio Codec 4
AD – Audio Description
ATSC – Advanced Television Systems Committee
BCP – Best Current Practice
C – Center (audio channel)
DASH – Dynamic Adaptive Streaming over HTTP
DASH-IF – DASH Industry Forum
E-AC-3 – Enhanced AC-3
EAS – Emergency Alert System
HOA – Higher Order Ambisonics
HTTP – Hypertext Transfer Protocol
ID – Identifier or Identity (per A/331 [4])
IEEE – Institute of Electrical and Electronics Engineers
IETF – Internet Engineering Task Force
ISO – International Organization for Standardization
ISOBMFF – ISO Base Media File Format
kHz – Kilohertz
L – Left (audio channel)

LF – Left Front (audio channel)
LFE – Low Frequency Effects (audio channel)
LR – Left Rear (audio channel)
LS – Left Side or Left Surround (audio channel)
M&E – Music and Effects
MAE – Metadata Audio Elements
MPEG-H – Abbreviation for Parts of ISO/IEC 23008
NGA – Next Generation Audio
OAM – Object Audio Metadata
R – Right (audio channel)
RF – Right Front (audio channel)
RR – Right Rear (audio channel)
RS – Right Side or Right Surround (audio channel)
SAP – Secondary Audio Programming
TV – Television

4. AUDIO GLOSSARY

This section defines the specific terminology used for the ATSC 3.0 audio system. The terms defined in Section 4.1 are common terms, and may, in some cases, map to alternative terms used by individual systems specified in subsequent parts of this standard [2] [3]. A mapping to those terms is provided in Section 4.2. Figure 4.1 illustrates the relationship between several defined terms.

4.1 Common Terms

Common terms are given in Table 4.1. The relationship of key terms is illustrated in Figure 4.1.

Table 4.1 Common Terms as they Apply to this Standard

Term	Description
2.0	Nomenclature for stereo audio, with two audio channels (L, R), as found in legacy television audio systems.
5.1	Nomenclature for surround audio, with five full-range audio channels (L, C, R, LS, RS) and one low-frequency effects (LFE) channel, as found in the existing ATSC digital television audio system.
7.1+4	Nomenclature for a particular 11.1 loudspeaker arrangement suitable for Immersive Audio, consisting of three frontal loudspeakers (L, C, R) and four surround loudspeakers (left side [LS], left rear [LR], right side [RS], right rear [RR]) on the listener's plane, and four speakers placed above the listener's head height (arranged in LF, RF, LR and RR positions).
Audio Description	Defined in a regulation of the United States, 47 CFR §79.3(a)(3), as "The insertion of audio narrated descriptions of a television program's key visual elements into natural pauses between the program's dialogue." It has sometimes been termed Video Description or VDS. Such usage is considered obsolete.
Audio Element	The smallest addressable unit of an *Audio Program*. Consists of one or more *Audio Signals* and associated *Audio Element Metadata,* and can be configured as any of three different *Audio Element Formats* (See Figure 4.1).
Audio Element Format	Description of the configuration and type of an *Audio Element*. Notes: There are three different types of Audio Element Formats. Depending on the type, different kinds of properties are used to describe the configuration:

	Channel-based audio: e.g., the number of channels and the channel layout Object-based audio: e.g., dynamic positional information Scene-based audio: e.g., HOA order, number of transport channels
Audio Element Metadata	Metadata associated with an *Audio Element*. Notes: Some examples of Audio Element Metadata include positional metadata (spatial information describing the position of objects in the reproduction space, which may dynamically change over time, or channel assignments), or personalization metadata (set by content creator to enable certain personalization options such as turning an element "on" or "off", adjusting its position or gain, and setting limits within which such adjustments may be made by the user). (See Section 4.2 for alternate nomenclature used for this term in other documents.)
Audio Emergency Information	"Emergency Information" data to be presented aurally, such as the reading of a text crawl, which is distinct from Emergency Alert System (EAS) data and audio.
Audio Object	An *Audio Element* that consists of an *Audio Signal* and *Audio Element Metadata,* which includes rendering information (e.g., gain and position) that may dynamically change. Audio Objects with rendering information that does <u>not</u> dynamically change may be called "static objects".
Audio Presentation	A set of *Audio Program Components* representing a version of the *Audio Program* that may be selected by a user for simultaneous decoding. Notes: An Audio Presentation is a sub-selection from all available *Audio Program Components* of one *Audio Program*. (See Figure 4.1.) A Presentation can be considered the NGA equivalent of audio services in predecessor systems, which each utilized complete mixes (e.g., "SAP" or "AD") (See Section 4.2 for alternate nomenclature used for this term in other documents.)
Audio Program	The complete collection of all *Audio Program Components* and a set of accompanying *Audio Presentations* that are available for one Audio Program (See Figure 4.1). Notes: Not all *Audio Program Components* of one Audio Program are necessarily meant to be presented at the same time. An Audio Program may contain *Audio Program Components* that are always presented, and it may include optional *Audio Program Components*. (See Section 4.2 for alternate nomenclature used for this term in other documents.)
Audio Program Component	A logical group of *Audio Elements* that is used to define an *Audio Presentation* and may consist of one or more *Audio Elements.* (See Figure 4.1.) (See Section 4.2 for alternate nomenclature used for this term in other documents.)
Audio Program Component Type	Characterization of an *Audio Program Component* with regard to its content. Notes: Examples for Audio Program Component Types are: Complete Main Music and Effects (M&E) [the background signal that contains a Mix of various Audio Signals except speech] Dialog [one or more Audio Signals that contain only speech] Audio Description
Audio Signal	A mono signal. (See Figure 4.1.)
Bed	An *Audio Element* that is intended to be used as the foundational element of an *Audio Presentation* (e.g., Music and Effects), to which other complementing Audio Elements (e.g., Dialog) are added.
Channel Set	A group of *Channel Signals* that are intended to be reproduced together.
Channel Signal	An *Audio Signal* that is intended to be played back at one specific nominal loudspeaker position.
Complete Mix	All *Audio Elements* of one *Audio Presentation* mixed together and presented as a single *Audio Program Component*.
Elementary Stream	A bit stream that consists of a single type of encoded data (audio, video, or other data). Notes: The *Audio Elements* of one *Audio Program* may be delivered in a single audio Elementary Stream or distributed over multiple audio Elementary Streams. (See Section 4.2 for alternate nomenclature used for this term in other documents.)

Higher-Order Ambisonics	A technique in which each produced signal channel is part of an overall description of the entire sound scene, independent of the number and locations of actually available loudspeakers.
Immersive Audio	An audio system that enables high spatial resolution in sound source localization in azimuth, elevation and distance, and provides an increased sense of sound envelopment.
LFE	Low-frequency effects channel. A limited frequency response channel that carries only low frequency (e.g., 100 Hz and below) audio.
Mix	A number of *Audio Elements* of one *Audio Program* that are mixed together into one *Channel Signal* or into a *Bed*.
Rendering	The realization of aural content for acoustical presentation.
Track	Representation of an *Elementary Stream* that is stored in a file format like the ISO Base Media File Format. Notes: For some systems, it may be possible to directly store the unmodified data from the *Elementary Stream* into a Track, whereas for other systems it may be necessary to re-format the data for storage in a Track.

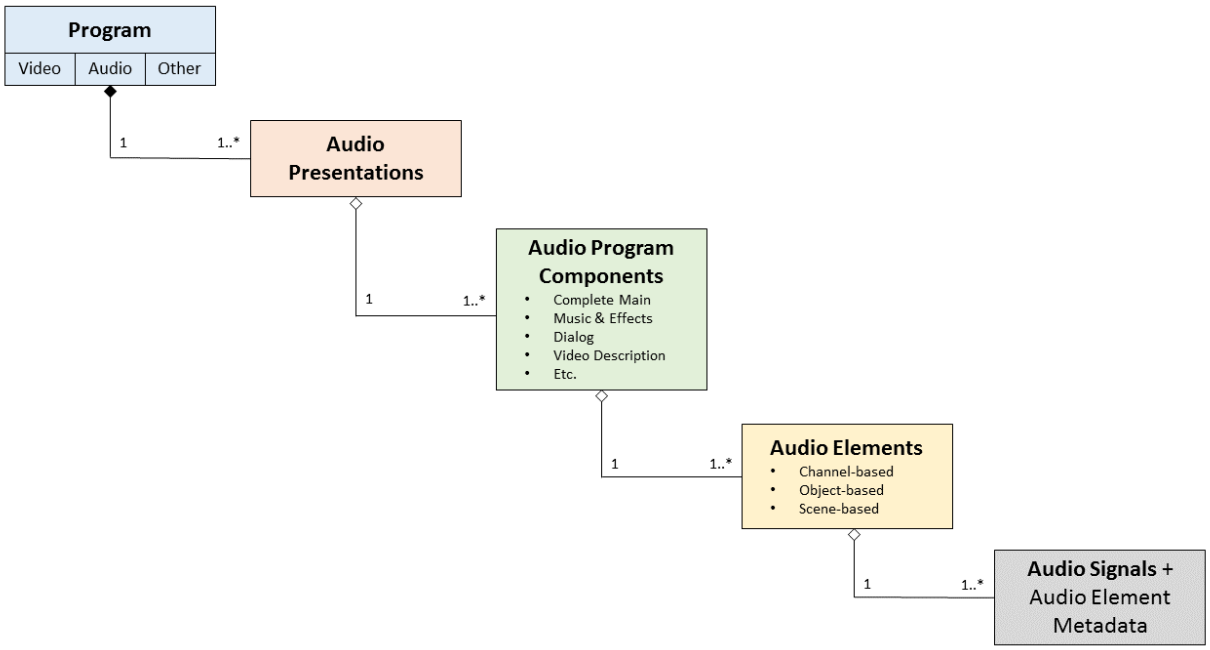

Figure 4.1 Relationship of key audio terms.

4.2 Mapping of Terms to Specific Technologies

Table 4.2 lists the alternative terms used for the items defined above by the individual systems defined in subsequent parts of this standard, and by the DASH-IF.

Table 4.2 Mapping of Alternative Terms to Audio Glossary Common Terms

Common Term	DASH-IF Term [7]	AC-4 Term [2]	MPEG-H Audio Term [3]
Audio Element Metadata		Metadata, Object Audio Metadata	Metadata Audio Elements (MAE), Object Metadata (OAM)
Audio Presentation	Preselection	Presentation	Preset
Audio Program	Bundle	Audio Program	Audio Scene

Audio Program Component	Referred to as Audio Element	Audio Program Component	Group
Elementary Stream	Representation in an Adaptation Set	Elementary Stream	Elementary Stream

5. SYSTEM OVERVIEW

5.1 Audio System Features

5.1.1 Immersive and Legacy Support

The ATSC 3.0 audio system supports Immersive Audio with enhanced performance when compared with existing 5.1 channel-based systems.

The system supports delivery of audio content from mono, stereo, 5.1 channel and 7.1 channel audio sources, as well as from sources supporting Immersive Audio. Immersive features are supported over the listening area. Such a system might not directly represent loudspeaker feeds but instead could represent the overall sound field.

5.1.2 Next Generation Audio System Flexibility

The ATSC 3.0 audio system enables Immersive Audio on a wide range of loudspeaker configurations, including loudspeaker configurations with suboptimum loudspeaker locations, and headphones.

The system enables audio reproduction on loudspeaker configurations not designed for Immersive Audio such as 7.1 channel, 5.1 channel, two channel and single channel loudspeaker configurations.

5.1.3 Personalization and Interactive Control

The ATSC 3.0 audio system enables user control of certain aspects of the sound scene that is rendered from the encoded representation (e.g., relative level of dialog, music, effects, or other elements important to the user).

The system enables user-selectable alternative audio Tracks to be delivered via terrestrial broadcast or via broadband and in real time or non-real time. Such audio Tracks may be used to replace the primary audio Track or be mixed with the primary audio Track and delivered for synchronous presentation with the corresponding video content.

The system enables receiver mixing of alternative audio Tracks (e.g., assistive audio services, other language dialog, special commentary, Music and Effects) with the main audio Track or other audio Tracks, with relative levels and position in the sound field and receiver adjustments suitable to the user.

The system enables broadcasters to provide users with the option of varying the loudness of a TV program's dialog relative to other elements of the audio Mix to increase intelligibility.

5.1.4 Next Generation Audio System Loudness Management and Dynamic Range Control

The ATSC 3.0 audio system supports information and functionality to normalize and control the loudness of reproduced audio content.

The system enables adapting the loudness and dynamic range of audio content as appropriate for the receiving device and environment of the content presentation.

5.1.5 Audio Emergency Information

The ATSC 3.0 audio system supports the inclusion and signaling of audio (speech) that provides an aural representation of emergency information provided by broadcasters in on-screen text display (static, scrolling or "crawling" text).

Note that this is not Emergency Alerting, but rather contains additional emergency information provided by broadcasters.

5.1.5.1 Audio Emergency Information Signaling

Signaling for Audio Emergency Information is specified in ATSC A/331 [4].

5.1.5.2 Insertion of Audio Emergency Information by Specific Technologies

Insertion of Audio Emergency Information shall be performed as defined in subsequent parts of this Standard [2] [3].

5.2 Audio System Architecture

The ATSC 3.0 system is designed with a "layered" architecture in order to leverage the many advantages of such a system, particularly pertaining to upgradability and extensibility. A generalized layering model for ATSC 3.0 is shown in Figure 5.1. The ATSC 3.0 audio system resides in the upper layer (Applications & Presentation). Audio system signaling resides primarily in the middle layer (Management & Protocols).

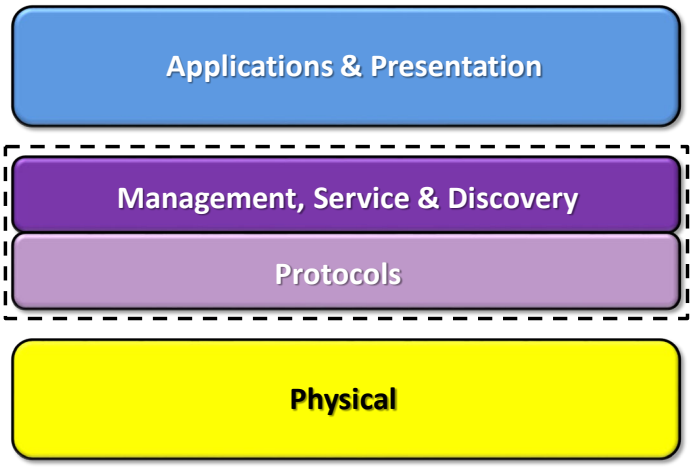

Figure 5.1 ATSC 3.0 generalized layer architecture.

5.3 Central Concepts

Several concepts are common to all audio systems supported by ATSC 3.0. This section describes these common concepts.

5.3.1 Audio Program Components and Presentations

Audio Program Components are separate pieces of audio data that are combined to compose an Audio Presentation. A simple Audio Presentation may consist of a single Audio Program Component, such as a Complete Main Mix for a television program. Audio Presentations that are more complex may consist of several Audio Program Components, such as ambient Music and Effects, combined with dialog and Audio Description.

Audio Presentations are combinations of Audio Program Components representing versions of the audio program that may be selected by a user. For example, a complete audio with English dialog, a complete audio with Spanish dialog, a complete audio (English or Spanish) with Audio Description, or a complete audio with alternate dialog may all be selectable Presentations for a Program.

The Components of a Presentation can be delivered in a single audio Elementary Stream or in multiple audio Elementary Streams. Signaling and delivery of audio Elementary Streams is documented in ATSC A/331 [4].

5.3.2 Audio Element Formats

The ATSC 3.0 audio system supports three fundamental Audio Element Formats:

1) Channel Sets are sets of Audio Elements consisting of one or more Audio Signals presenting sound to speaker(s) located at canonical positions. These include configurations such as mono, stereo, or 5.1, and extend to include non-planar configurations, such as 7.1+4.
2) Audio Objects are Audio Elements consisting of audio information and associated metadata representing a sound's location in space (as described by the metadata). The metadata may be dynamic, representing the movement of the sound.
3) Scene-based audio (e.g., HOA) consists of one or more Audio Elements that make up a generalized representation of a sound field.

5.3.3 Audio Rendering

Audio Rendering is the process of composing an Audio Presentation and converting all the Audio Program Components to a data structure appropriate for the audio outputs of a specific receiver. Rendering may include conversion of a Channel Set to a different channel configuration, conversion of Audio Objects to Channel Sets, conversion of scene-based sets to Channel Sets, and/or applying specialized audio processing such as room correction or spatial virtualization.

5.3.3.1 Audio Description (AD)

Audio Description is an audio service carrying narration describing a television program's key visual elements. These descriptions are inserted into natural pauses in the program's dialog. Audio description makes TV programming more accessible to individuals who are blind or visually impaired. Audio Description may be provided by sending a collection of "Music and Effects" components, a Dialog component, and an appropriately labeled Audio Description component, which are mixed at the receiver. Alternatively, an Audio Description may be provided as a single component that is a Complete Mix, with the appropriate label identification.

5.3.3.2 Multi-Language

Traditionally, multi-language support is achieved by sending Complete Mixes with different dialog languages. In the ATSC 3.0 audio system, multi-language support can be achieved through a collection of "Music and Effects" streams combined with multiple dialog language streams that are mixed at the receiver.

5.3.3.3 Personalized Audio

Personalized audio consists of one or more Audio Elements with metadata, which describes how to decode, render, and output "full" Mixes. Each personalized Audio Presentation may consist of an ambience "bed", one or more dialog elements, and optionally one or more effects elements. Multiple Audio Presentations can be defined to support a number of options such as alternate language, dialog or ambience, enabling height elements, etc.

There are two main concepts of personalized audio:

1) Personalization selection – The bit stream may contain more than one Audio Presentation where each Audio Presentation contains pre-defined audio experiences (e.g. "home team" audio experience, multiple languages, etc.). A listener can choose the audio experience by selecting one of the Audio Presentations.
2) Personalization control – Listeners can modify properties of the complete audio experience or parts of it (e.g., increasing the volume level of an Audio Element, changing the position of an Audio Element, etc.).

6. SPECIFICATION

6.1 Audio Constraints

The following constraints are applied to all audio content in ATSC 3.0 services.

6.1.1 Sampling Rate

The sampling frequency of Audio Signals shall be 48 kHz.

6.1.2 Audio Program Structure

An Audio Program shall consist of one or more Audio Presentations. Exactly one Audio Presentation shall be identified as the Default Audio Presentation and shall have all of its Audio Program Components present in a single Elementary Stream. The Default Audio Presentation is intended to be the default selection in cases when no other selection guidance (user-originated or otherwise) exists.

Audio Presentations shall consist of at least one Audio Program Component of any Audio Element Format.

Audio Program Components may be delivered in more than one Elementary Stream. Audio Presentations other than the Default Audio Presentation may include Audio Program Components from multiple Elementary Streams. Audio Presentations shall not utilize Audio Program Components from more than three Elementary Streams.

The single Elementary Stream that carries all Audio Program Components of the Default Audio Presentation shall be delivered over broadcast, except for when all content components of the Service are delivered exclusively over broadband, as specified in Section 8.2.1.2 of ATSC A/331 [4] ("Broadband DASH-only Service Access").

When some or all content components of the service are delivered over broadcast, the single Elementary Stream that carries all Audio Program Components of the Default Audio Presentation is delivered over broadcast and any additional Elementary Streams may be delivered over either broadcast or a broadband connection.

Further constraints are defined in subsequent parts of this standard.

6.1.3 General Elementary Stream Structure

Audio Elementary Streams shall be packaged and signaled in ISOBMFF in a configuration specified by the A/331 standard [4].

6.2 Signaling of Audio Characteristics

Table 6.1 describes the audio characteristics that are signaled in the delivery layer [4].

Table 6.1 Audio Characteristics

Item	Name	Description	Options
1	Codec	Indicates the codec and resources required to decode the bit stream.	FourCC (i.e., ac-4, mhm1, mhm2) followed by codec specific level or version indicators.
2	Role	Indicates the role of the default (entry point) presentation or preset.	Values as defined by A/331, Section 7 [4].
3	Language	Indicates the language of a presentation or preset.	BCP 47 language codes [5].
4	Accessibility	Indicates the accessibility features of a presentation or preset.	Dialog Enhancement, Audio representation of Emergency Information, Descriptive Video Service.
5	Sampling Rate	Output sampling rate.	48000
6	Audio channel configuration	Indicates the channel configuration and layout.	Codec specific.
7	Presentation or preset identifier	Indicates IDs for each presentation or preset.	Codec specific.

The audio system shall operate according to A/342-2 when the transport layer signals that the item 1 codec parameter is equal to ‘ac-4’, and according to A/342-3 when the transport layer signals that the item 1 codec parameter is equal to ‘mhm1’ or ‘mhm2’.

Annex A: Examples of Common Broadcast Operating Profiles

A.1 OPERATING PROFILES

Table A.1.1 lists some broadcast operating-profile examples and shows how the input elements for each profile fit into presentations or presets within a single elementary stream. Figure A.1.1 illustrates the encoding of some of the broadcast operating-profile examples. Note that these examples are not exhaustive and are included to demonstrate common/practical operating profiles.

The following notations are used in Table A.1.1 and Figure A.1.1:

- CM = Complete Main
- M&E = Music and Effects
- Dx = Dialog element (mono)
- AD = Audio Description (mono)
- O = Other object (mono), i.e. PA feed
- O(15).1 = 15 object or spatial object groups + LFE
- HOA(X) = 6th Order Higher Order Ambisonics sound-field represented by X Audio Signal transport channels

Table A.1.1 Encoding of Example Broadcast Operating Profiles

	Profile Type	Input Elements	Presentations/Presets	Elements Referenced by Presentation/Preset
1	Complete Main	2.0 CM	CM	CM
2		5.1 CM	CM	CM
3		HOA(6) CM	CM	CM
4		5.1.2 CM	CM	CM
5		7.1.4 CM	CM	CM
6		HOA(12) CM	CM	CM
7		O(15).1 CM	CM	CM
8	M&E + Objects	2.0 M&E + D	English	M&E + D
			M&E Only	M&E
9		5.1 M&E + D1 (en) + D2 (es) + AD (en)	English	M&E + D1
			English + AD	M&E + D1 + AD
			Spanish	M&E + D2
			M&E Only	M&E
10		HOA(6) + D1 (en) + D2 (es) + AD (en)	English	M&E + D1
			English + AD	M&E + D1 + AD
			Spanish	M&E + D2
			M&E Only	M&E
11		5.1.2 M&E + D1 (en) +D2 (es) + AD (en)	English	M&E + D1
			English + AD	M&E + D1 + AD
			Spanish	M&E + D2
			M&E Only	M&E
12		7.1.4 M&E + D1 (en) + D2 (es) + AD (en) + O	English	M&E + O + D1
			English + AD	M&E + D1 + AD
			Spanish	M&E + O + D2
			M&E	M&E + O
13		O(15).1 M&E + D1 (en) + D2 (es) + AD (en)	English	M&E + D1
			English + AD	M&E + D1 + AD
			Spanish	M&E + D2
			M&E Only	M&E
14		HOA(12) M&E + D1 (en) + D2 (es) + AD (en) + O	English	M&E + O + D1
			English + AD	M&E + D1 + AD
			Spanish	M&E + O + D2
			M&E	M&E + O

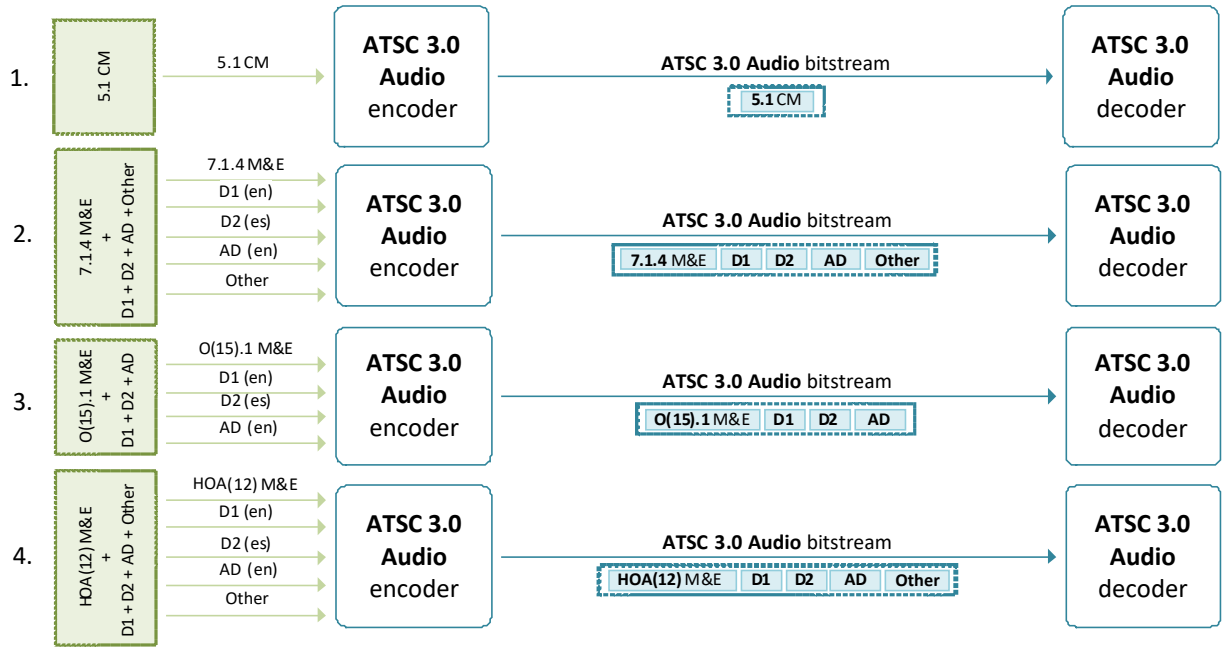

Figure A.1.1 Encoding of example broadcast operating profiles.

– End of Document –